JOB: _____

CONTRACTOR: _____

P.O. NO. _____

# TYPE "SNRC1" COMBINATION SPRING & NEOPRENE HANGER

| ISOLATOR TYPE | | COLOR CODE | RATED LOAD | RATED DEFL. |
|---|---|---|---|---|
| SNRC1 | C20 | RED | 30# | 1.25" |
| | C21 | GREEN | 60# | 1.25" |
| | C22 | BLUE | 100# | 1.25" |
| | C23 | YELLOW | 200# | 1.25" |

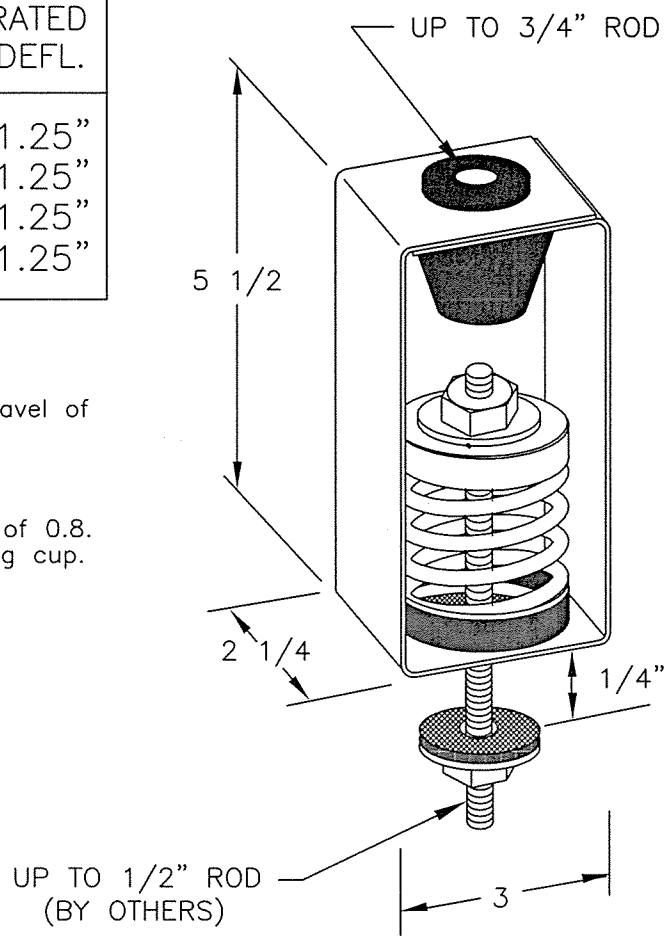


Note:

All springs are powder coated.
All springs are designed to provide additional travel of 50% of rated load.
Hanger bracket is zinc plated.
Hanger bracket will allow 30° rod misalignment.
Isolation hangers have a minimum Kx/Ky ratio of 0.8.
Isolation hangers have a neoprene bottom spring cup.

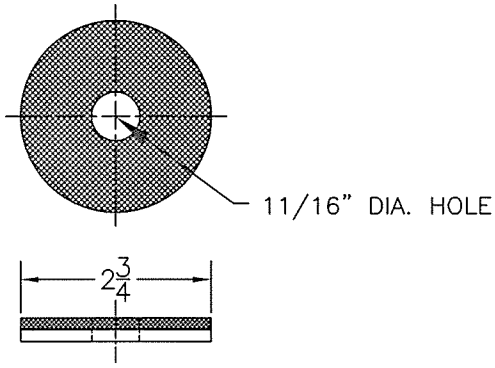


UPSTOP

"VLS" UP-STOPS


VIBRATION ELIMINATOR CO. INC.
15 Dixon Avenue
Copiague, NY 11726
PH. (631) 841-4000 FAX (631) 841-0020


| | | |
|---|---|---|
| Rev. | | |
| Rev. | | |
| Date: | Dwg. No.: | |